Product Submittal Sheet

Technical Services: 714-209-1141, Sales support@iscbuild.com

Termination Bar | AL75 Data Sheet **Aluminum 6063 T-6** | Mill-Finished Base

Introduction

Termination Bar is a durable extruded aluminum profile designed for use in roofing and waterproofing applications where membranes or flashing systems require secure mechanical attachment. Manufactured from 6063-T6 aluminum, it provides excellent strength, dimensional stability, and corrosion resistance for long-lasting performance in exterior construction environments.

This termination bar is commonly used to mechanically secure the top edge of roofing membranes or flashing to substrates such as parapet walls, curbs, and penetrations. The integrated sealant ledge provides a consistent, stable application surface for sealants and mastics, helping promote proper adhesion and a watertight finished detail. Pre-slotted 1/4" x 3/8" holes spaced 6" on center allow for efficient fastening and installation. The non-corrosive aluminum construction will not rust, making it suitable for a wide range of roofing and waterproofing applications.

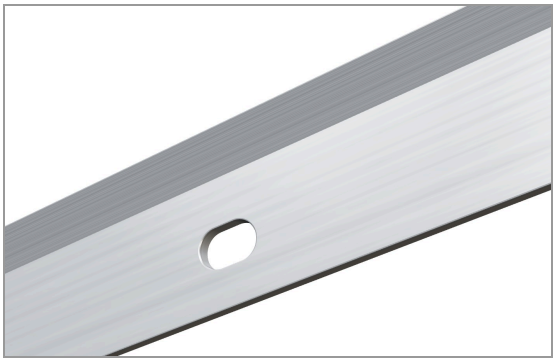

PROFILE DETAIL

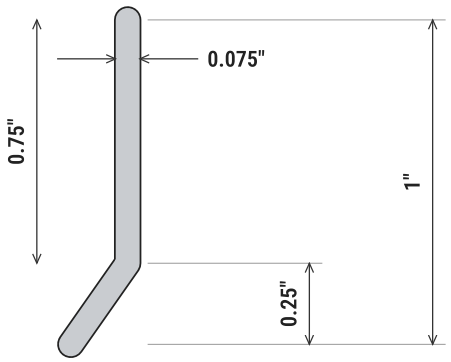

FRONT VIEW

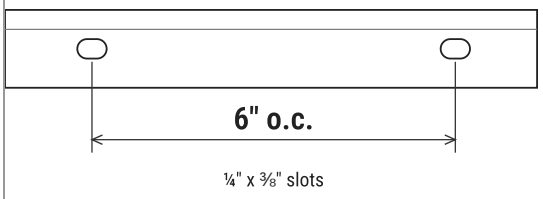

Packaging

Term Bar Size	Pieces per tube	Feet per tube	Hole Size	Approx Shipping Weight
1" x 10'	50	500	¼" x ⅜"	55 Lbs

Product Data

Material: Extruded 6063 Aluminum, Temper 6
Profile: 1" face, 0.075" thickness, 0.25" sealant ledge

Limitations

Termination Bar must be installed over a clean, dry, and structurally sound substrate capable of receiving mechanical fasteners. Fasteners should be selected based on the project substrate and installed at the required spacing to provide secure attachment. Termination Bar is not intended to serve as a structural support member and should only be used as part of an approved roofing, waterproofing, or flashing system.

Storage

All stored materials must be kept dry and protected from weather, moisture, and jobsite contaminants. Termination Bar should be stored flat, elevated off the ground, and supported on a level surface to prevent bending, twisting, or damage to the profile. Materials should remain in original packaging when possible and be handled carefully to avoid scratches, dents, or deformation prior to installation.

ASTM & Code Standards

ASTM B221 Standard Specification for Aluminum and Aluminum-Alloy Extruded Bars, Rods, Wire, Profiles, and Tubes

Aluminum Association / ANSI H35.1 Alloy and Temper Designation Systems for Aluminum

International Building Code, as adopted by local jurisdiction

NRCA Roofing Manual Guidelines, as applicable to roofing membrane termination, flashing, and waterproofing details

Installation shall comply with applicable project specifications, roofing membrane manufacturer requirements, fastener requirements, and local building code requirements.

Technical Services

Technical Services: 714.209.1141
Sales: support@iscbuild.com
www.iscbuild.com

This technical information reflects the most current information available and supersedes any and all previous publications effective November 20, 2026.